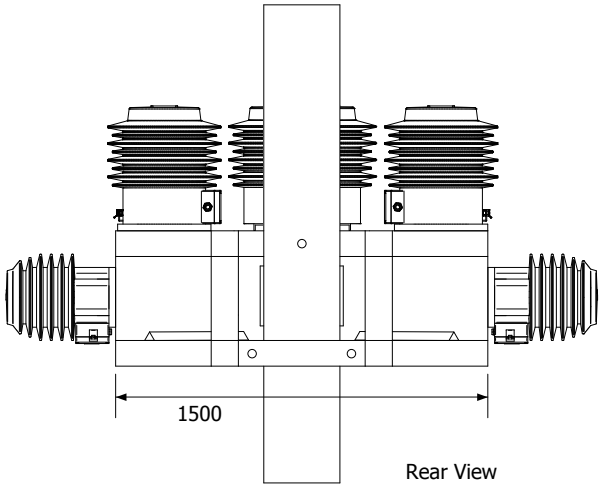

Rear View

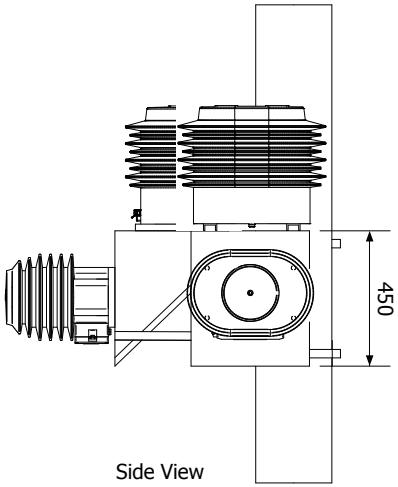

Side View

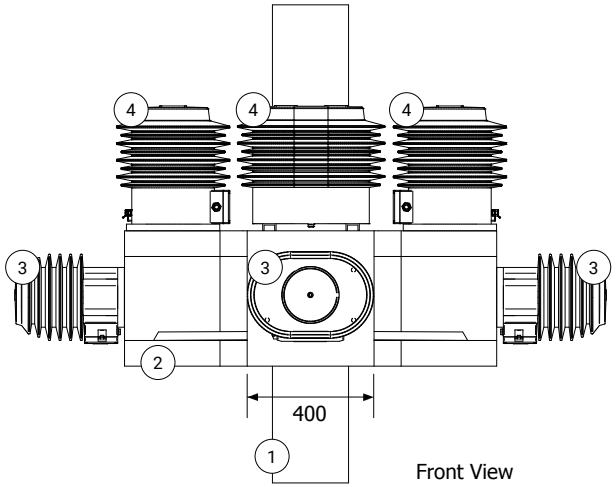

Front View

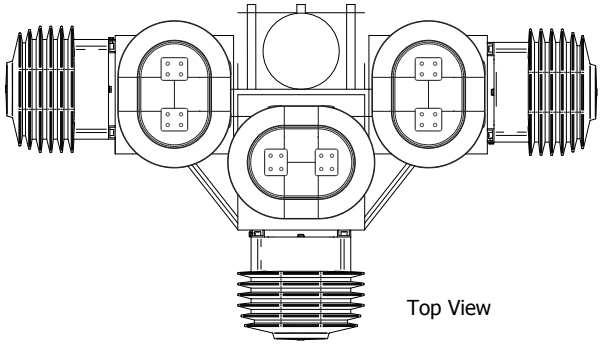

Top View

A - Top M14 Screw and Nut
B - Bottom Brace

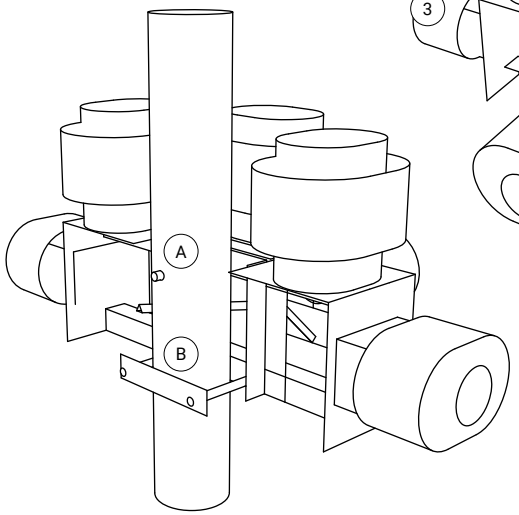

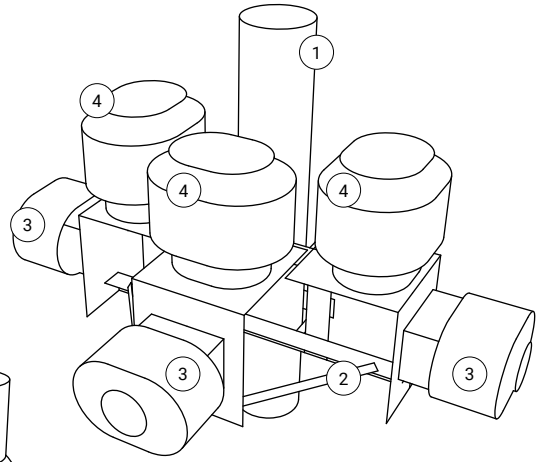

Ref	Denomination	Units	Code	Material
4	Current Transformer	3	IGWF	-
3	Voltage Transformer	3	UGEF	-
2	Structure	1	-	Stainless Steel AISI304
1	Mast	-	-	-

webdom
Renewables under control

Approved by	Date
Webdom Labs SL	16/07/2015

Pol. Ind. Santa Anna I, Km 4,200
08251 SANTPEDOR (Barcelona)
telf. +34 938 321 791
fax +34 938 321 796

Transformer Structure

Edition	Page
A	1/1